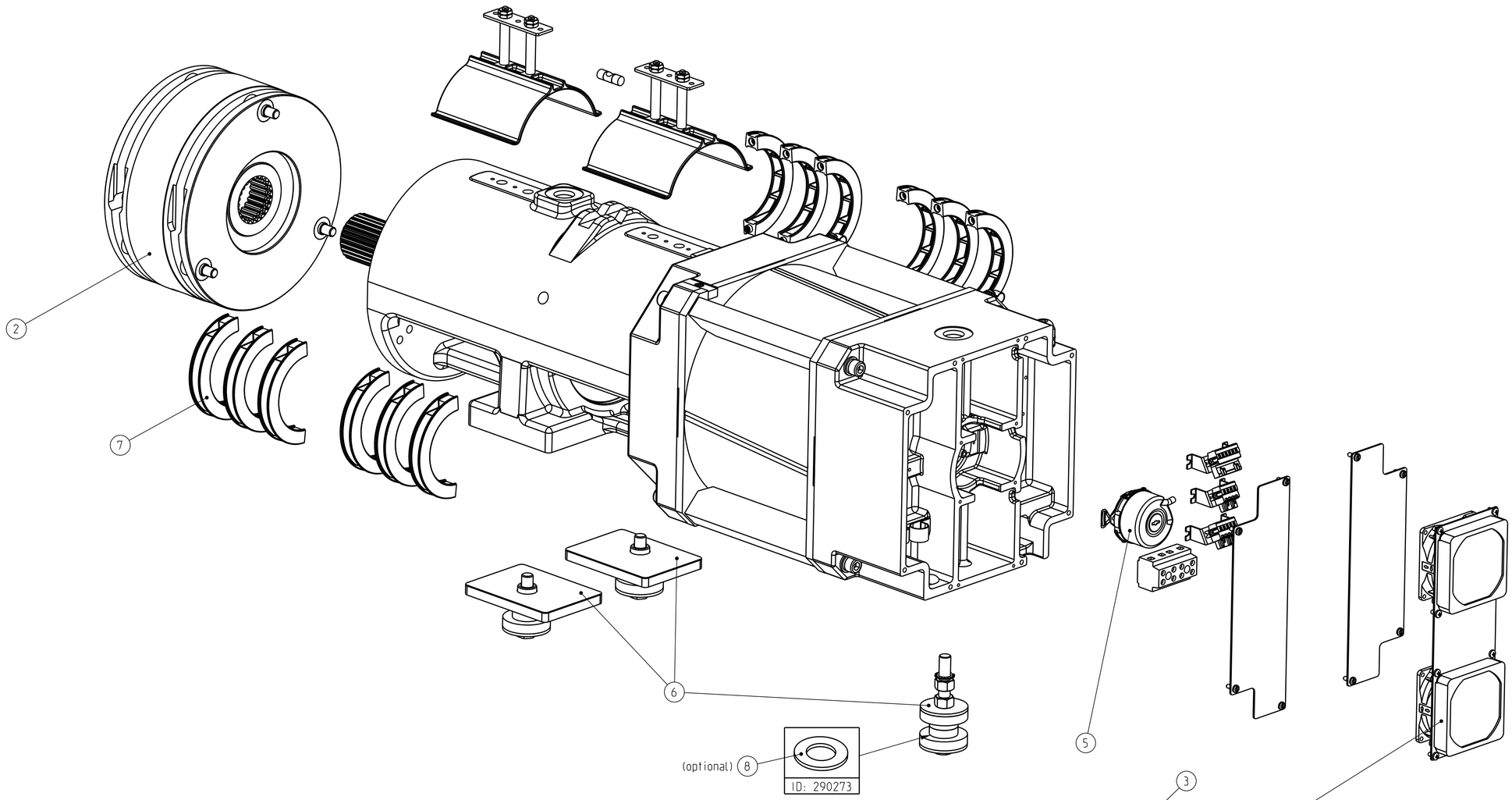

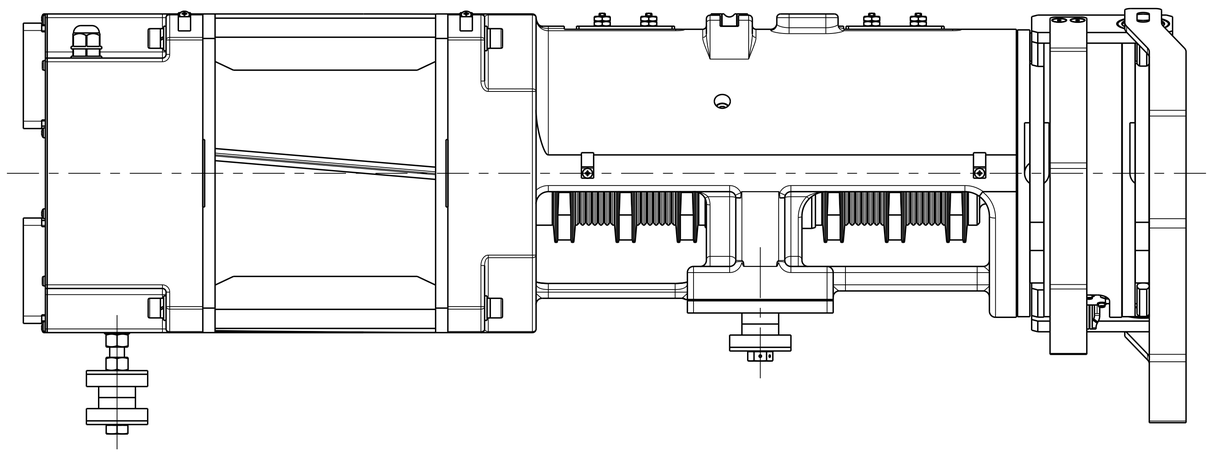

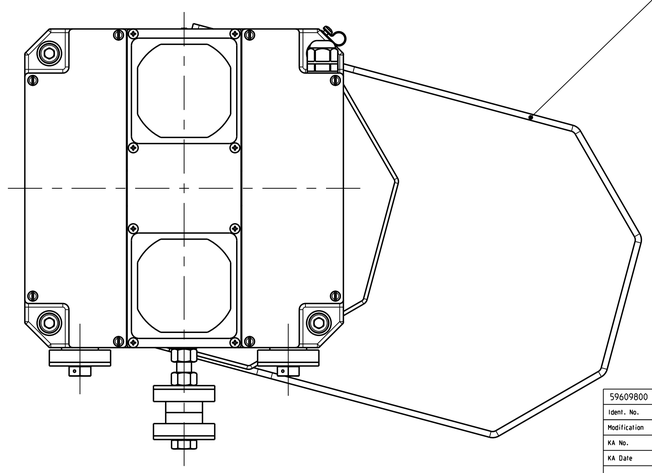

59609800										
Ident. No.	Semi finished product / raw material				Semi Fin. Ident. No.	Item	Code surface		Heat treatment	Drwg / BOM / Model	Weight Kg.
Modification						Ae1	Draw Ver.		Related BOM		
KA No.						142240	1.5		Related BOM		
KA Date						2020-01-18	Model Ver.		Related BOM		
								3.5	Release Level	Released	

Group: 01	Remark			Date	Name
DR PMB 135	Scale 2:5	Replaces /Ae:	Prepared	2019-10-10	murerre
			Reviewed	2019-10-11	ammonur
	Page 1/1		Norms checked	2019-10-11	ammonur
			Released	2019-10-11	jansentj
INVENTIO AG CH-6052 Hergiswil	Classification 11120 Format A1	Lead Office EB6	Z__59609800		Lang. EN

Copyright © 2017 INVENTIO AG All rights reserved.
INVENTIO AG, Seestrasse 55, CH-6052 Hergiswil, owns and retains all copyrights and other intellectual property rights in this document. Any reproduction, translation, copying or storing in data processing units in any form or by any means without prior permission of INVENTIO AG is regarded as infringement and will be prosecuted.

Confidential
This document contains confidential information that is proprietary to the Schindler Group. Neither this document nor the information contained herein shall be disclosed to third parties nor used for manufacturing or any other application without written consent of INVENTIO AG.

Vertraulich
Dieses Dokument enthält vertrauliche Informationen, die geistiges Eigentum der Schindler-Gruppe sind. Die in diesem Dokument enthaltenen Informationen dürfen ohne schriftliches Einverständnis der INVENTIO AG weder Dritten gegenüber offengelegt noch für die Fertigung oder sonstigen Zwecken verwendet werden.

Confidentiel
Le présent document contient des informations confidentielles qui sont la propriété du groupe Schindler. Ni ce document, ni les informations contenues dans ce dernier ne doivent être divulguées à des tierces parties, ou utilisées à des fins de fabrication sans L'accord écrit de INVENTIO AG.

保密
本文件包含商业秘密信息。未经INVENTIO AG书面同意
未文件及其所包含信息不得向第三方披露，也不得用于生产目的或任何其他用途。