Used for	KSL / Drawing

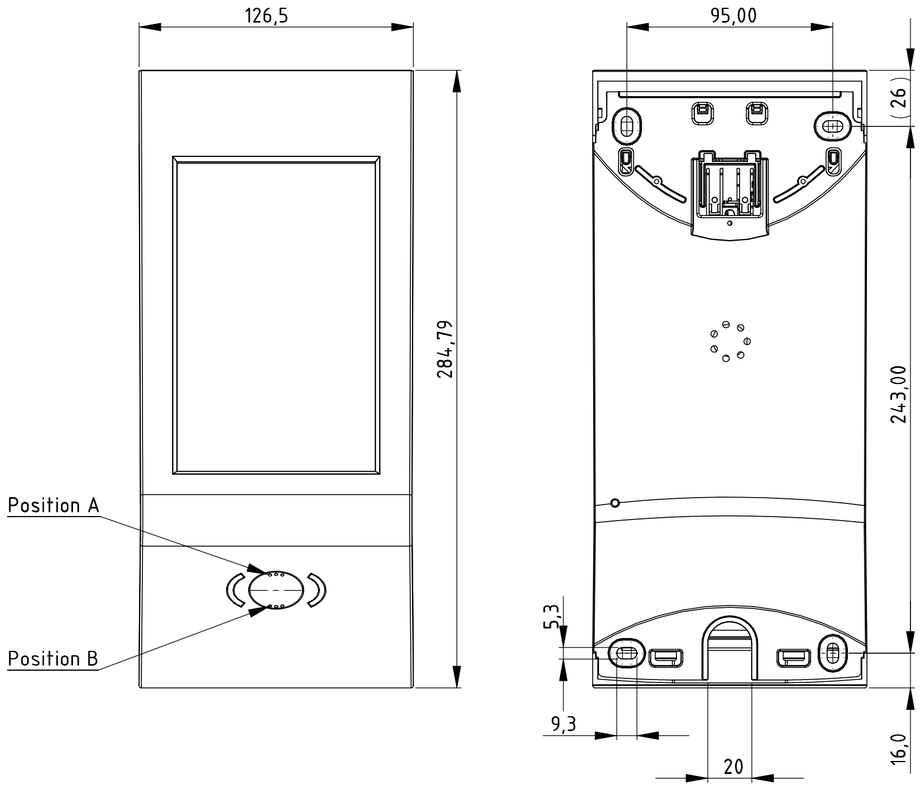

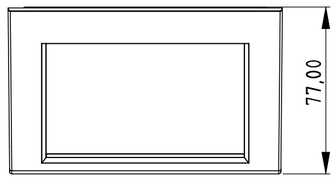

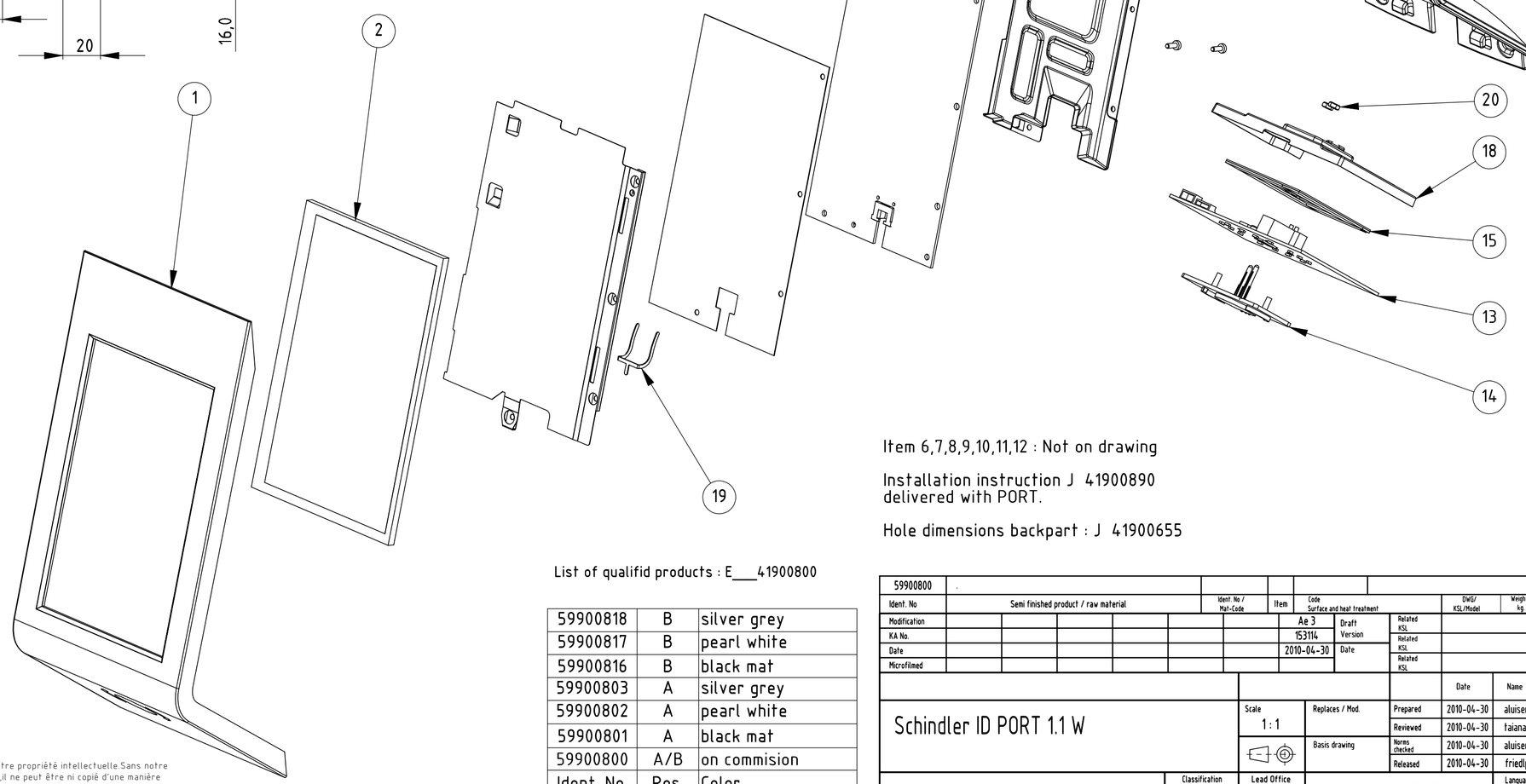

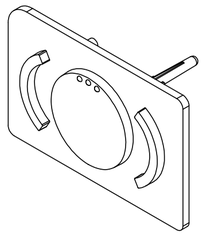

(14) Position A
wall (vertical)

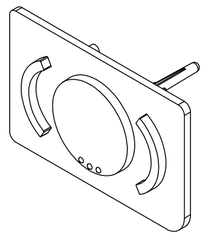

(14) Position B
gate (horizontal)

Item 6,7,8,9,10,11,12 : Not on drawing

Installation instruction J 41900890
delivered with PORT.

Hole dimensions backpart : J 41900655

List of qualifid products : E___41900800

Ident. No.	Pos.	Color
59900818	B	silver grey
59900817	B	pearl white
59900816	B	black mat
59900803	A	silver grey
59900802	A	pearl white
59900801	A	black mat
59900800	A/B	on commision

59900800	.								
Ident. No	Semi finished product / raw material			Ident. No / Mat-Code	Item	Code Surface and heat treatment		DWG/ KSL/Model	Weight kg
Modification						Ae 3	Draft Version	Related KSL	
KA No.						153114		Related KSL	
Date						2010-04-30	Date	Related KSL	
Microfilmed									

				Date	Name
Schindler ID PORT 1.1 W	Scale 1 : 1	Replaces / Mod.	Prepared	2010-04-30	aluisema
			Reviewed	2010-04-30	taianade
		Basis drawing	Norms checked	2010-04-30	aluisema
			Released	2010-04-30	friedlpa
INVENTIO AG CH-6052 Hergiswil	Classification 11240 / Format A2	Lead Office EB9	Z__41900800		Language EN

This presentation is our intellectual property. Without our written consent, it shall neither be copied in any manner, nor used for manufacturing, nor communicated to third parties.

Diese Darstellung ist unser geistiges Eigentum.Sie darf ohne unsere schriftliche Zustimmung weder irgendwie kopiert noch zur Anfertigung des Werkes gebraucht oder Drittpersonen bekanntgegeben werden.

Cet ouvrage est notre propriété intellectuelle.Sans notre autorisation écrite,il ne peut être ni copié d'une manière quelconque,ni être utilisé pour la fabrication,ni non plus être communiqué a des tiers.

CAD Form EB182-A1DE96